Metal.lab
ARCHITECTURAL ROOFING & CLADDING

TRIMS & FLASHINGS

Hook Eaves

(ML) 90120

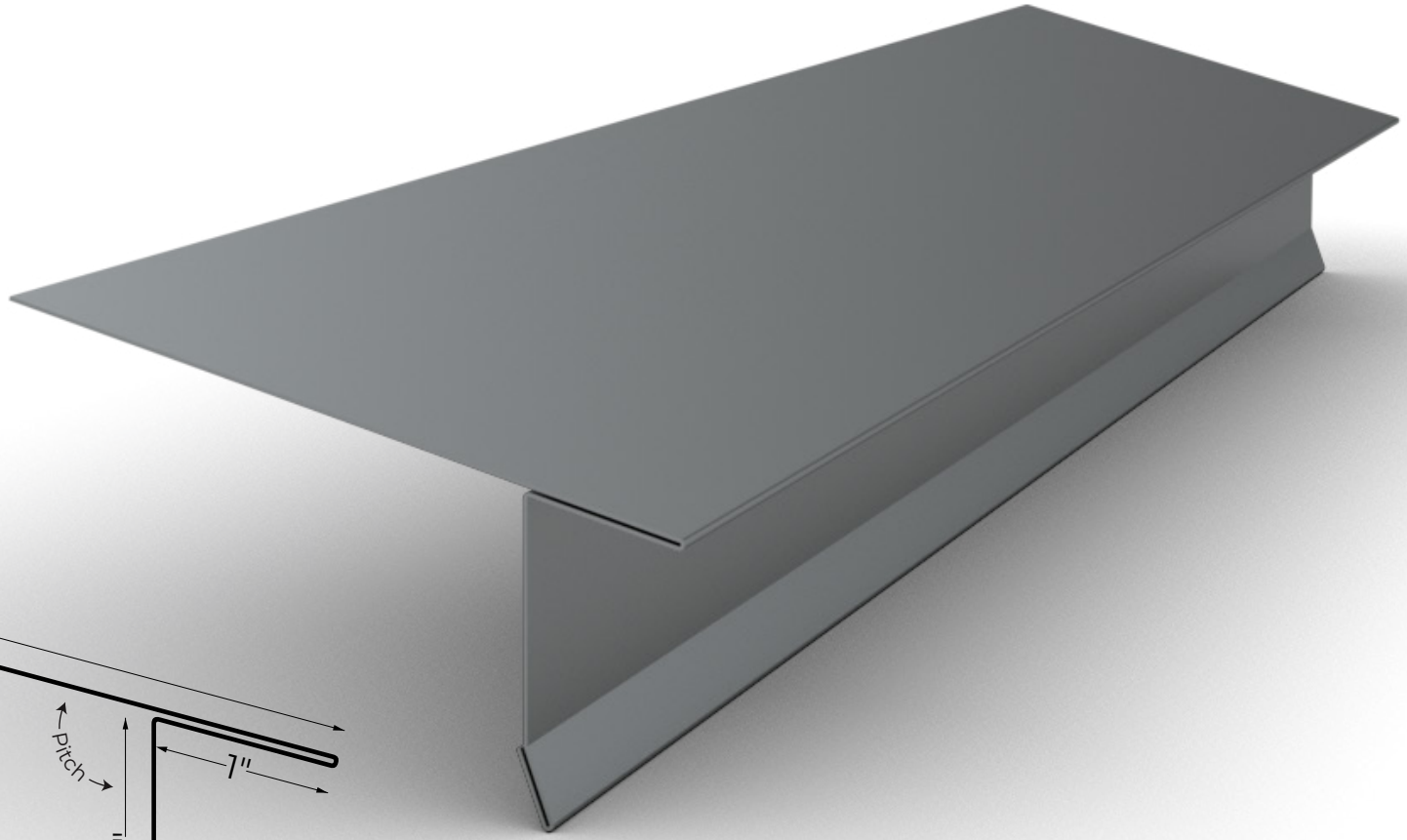

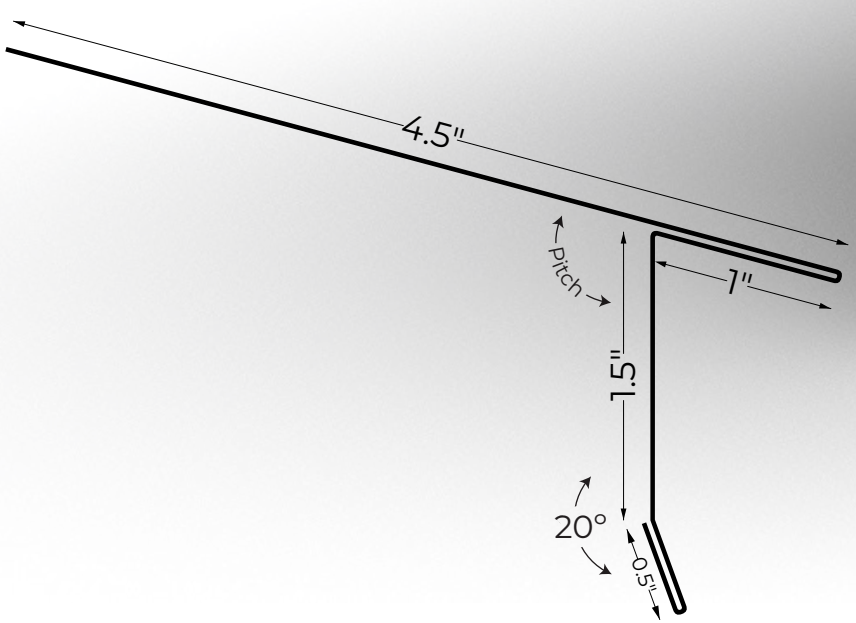

Hook Eaves
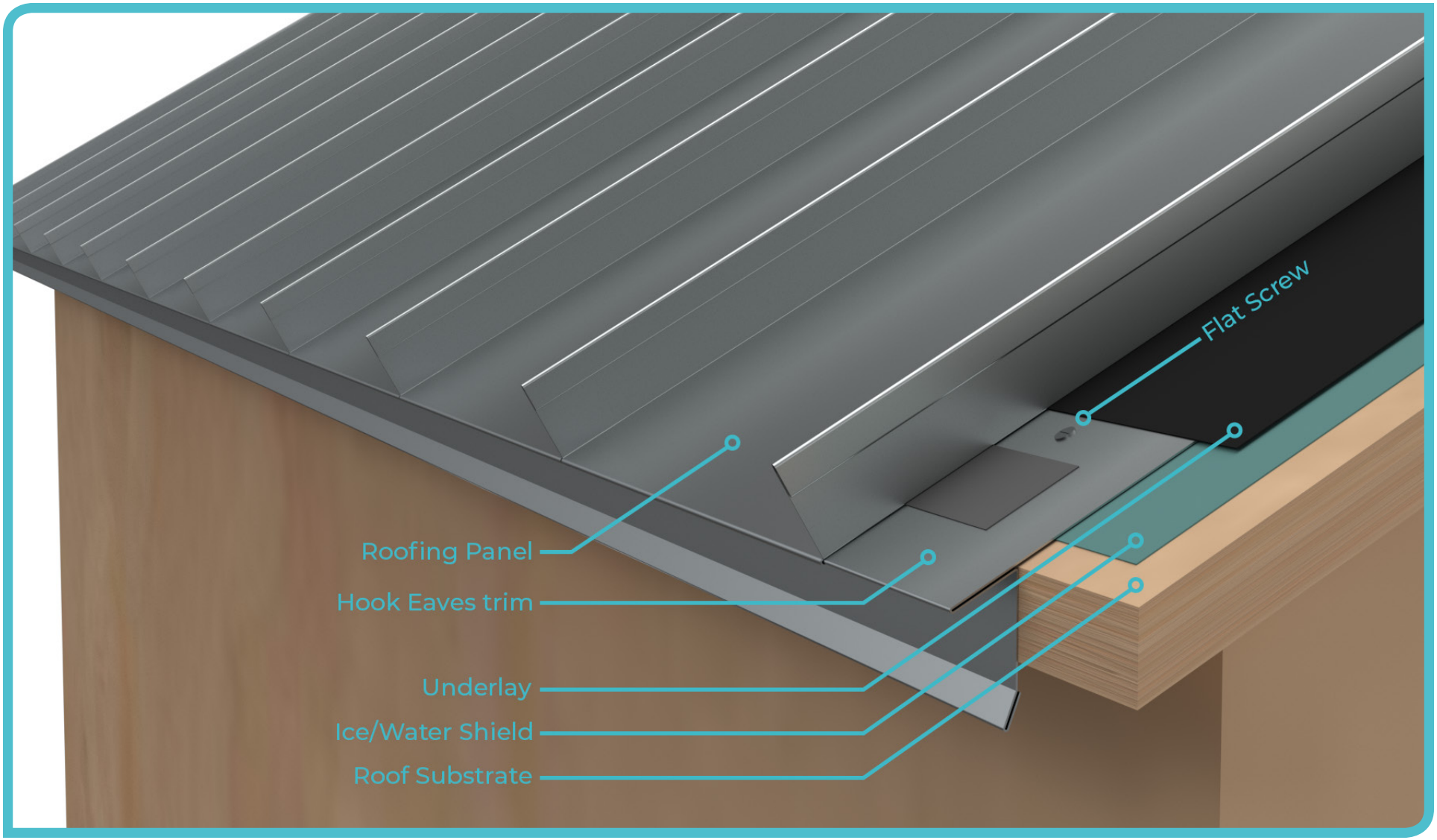
In use